MS56B-4 0,09KW 230/400V B34

Three-phase asynchronous motor in aluminum

Motor type	MS56B-4 0,09KW 230/400V B34
Brand	BUSCK
Item number	03040575

Voltage V	Power kW	Frequency Hz	Current A	Speed rpm
230	0,09	50	0,68	1400
400	0,09	50	0,39	1400
460	0,10	60	0,39	1680

Duty	S1
Enclosure	IP55
Insulation class	F
Cooling	IC411 (TEFC)
Max. ambient temp.	40°C
Min. ambient temp.	-20°C
Max. temp. rise	80 K
Max altitude, masl	1000
Torque, Nm	0,61
Starting torque ratio	2,3
Pull up torque ratio	2,8
Pull out torque ratio	2,5
Starting current ratio	4
Balance grade	Normal
Inertia kgm2	0,00024

Efficiency class	IE1
Efficiency, load 100%	56,2
Efficiency, load 75%	51,7
Efficiency, load 50%	43,1
Power fact, load 100%	0,59
Painting	Standard
Color	RAL 9005
Weight kg	3,2
Sound pressure Lp dB(A)	50
Bearing DE	6201-2Z
Bearing NDE	6201-2Z
Cable entries	1xM16

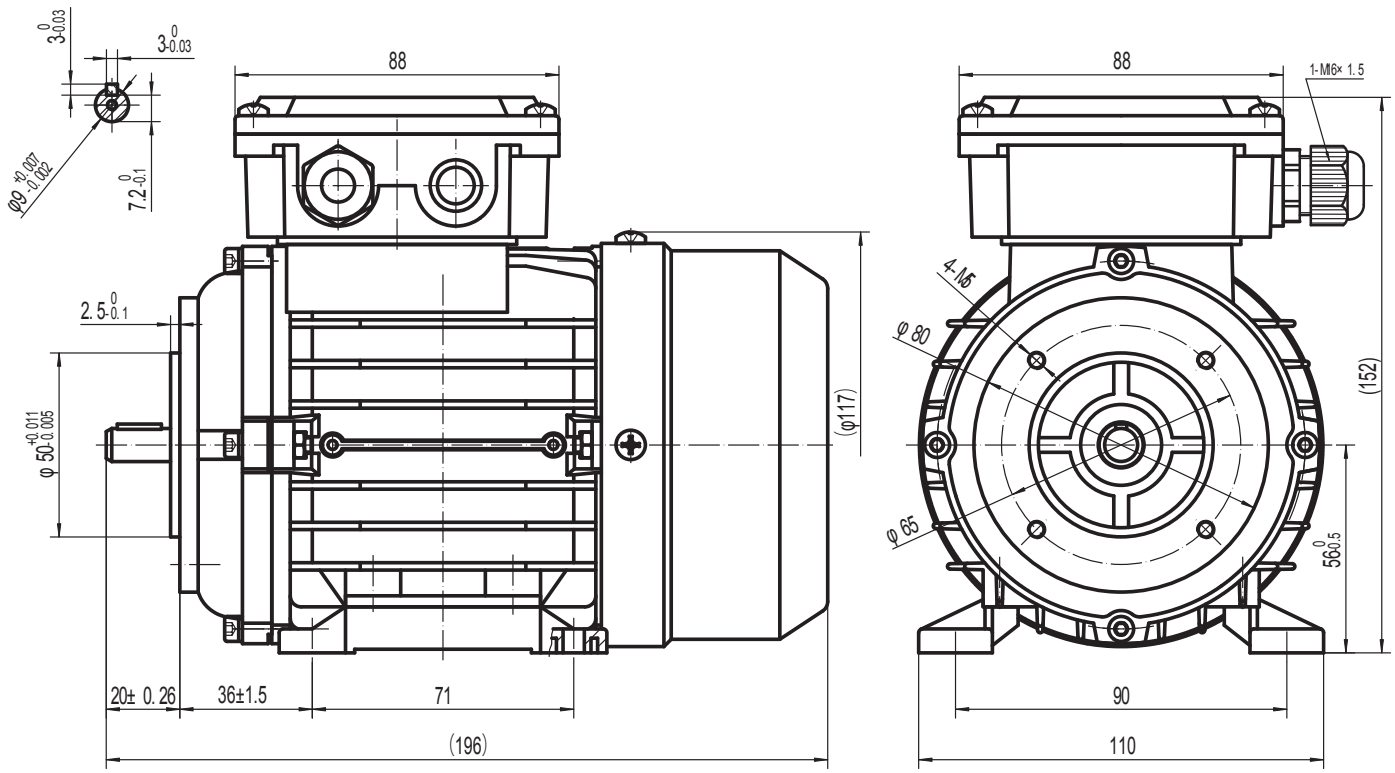

BUSCK
www.busck.eu

Busck & Co AB
Gamla Riksvägen 14
428 32 Göteborg
Sweden
556027-1990
info@busck.se

Busck & Co ApS
Postboks 108
0900 København C
Denmark
info@busck.eu

Busck AS
Skibåsen 35C
4636 Kristiansand
Norway
info@busck.no